TACO MARINE

INSTRUCTIONS
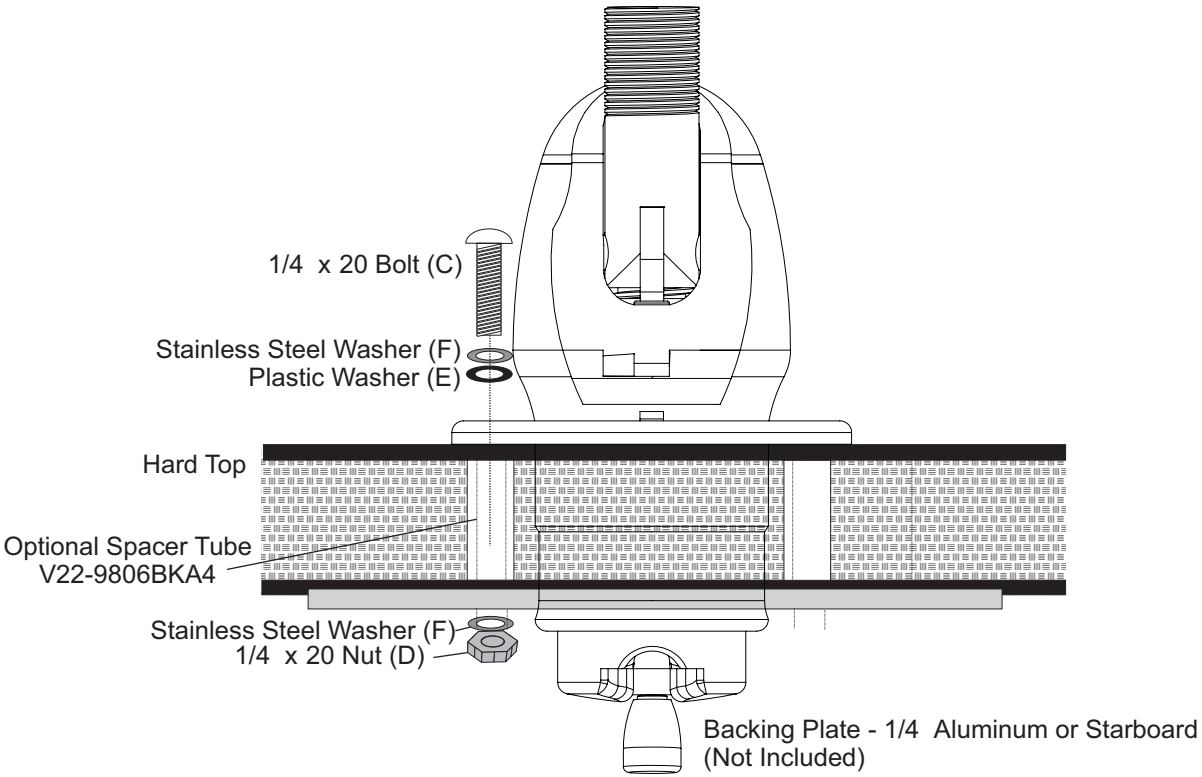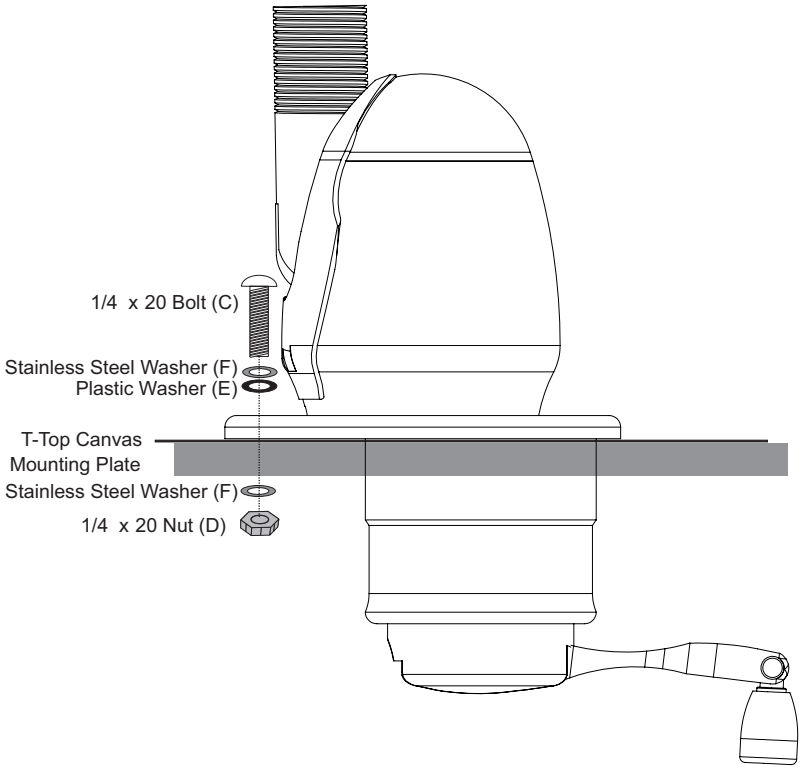
Grand Slam 880 Antenna Mount
GS-880